PART NUMBER: 20041-DP412

TITLE: 40+40kW COMBINER BRIDGE DIPLEXER (DOUBLE CAVITY)

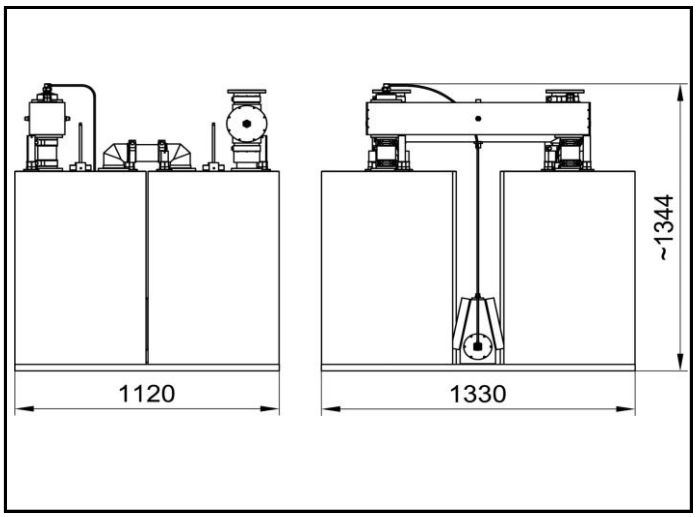

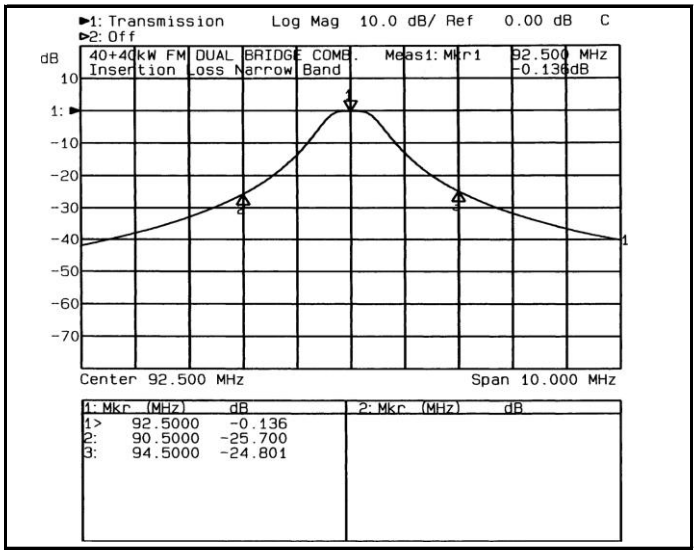

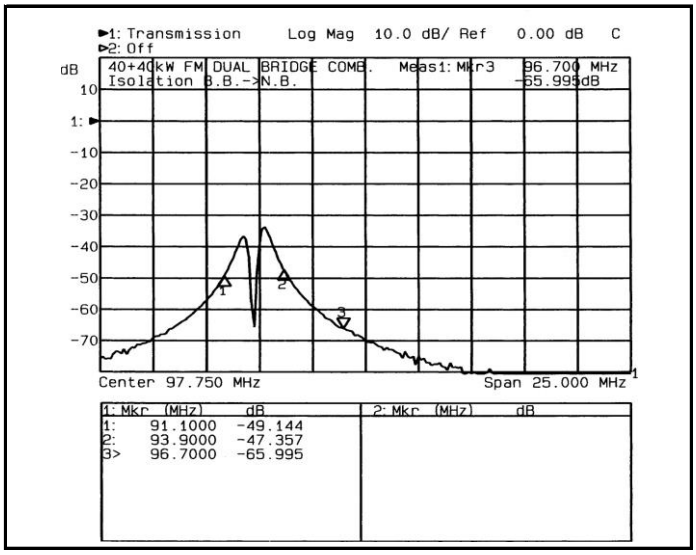

ELECTRICAL CHARACTERISTICS	
Frequency Range (MHz)	87.5 ÷ 108
N.B. Insertion Loss (dB)	< 0.2
B.B. Insertion Loss (dB)	< 0.2
Min. distance between channels (MHz)	1.4
Insulation NB>BB (dB)	> 40
Insulation BB>NB (dB)	> 40
Return loss by channels (dB)	> 26
Input/Output impedance (Ohm)	50
Narrowband maximum power (W)	40000
Maximum output power (W)	80000

MECHANICAL CHARACTERISTICS	
Input narrowband	EIA 3 1/8"
Input broadband	EIA 4 1/2"
Output	EIA 4 1/2"
Temperature range (C°)	-10 ÷ 50
Weight (kg)	235

(*) Different connectors on request.