Delta Meccanica

PART NUMBER: 20000-S2-R

TITLE:

2x300W DOUBLE CAVITY BAND PASS FILTER STAR COMBINER
RACK VERSION

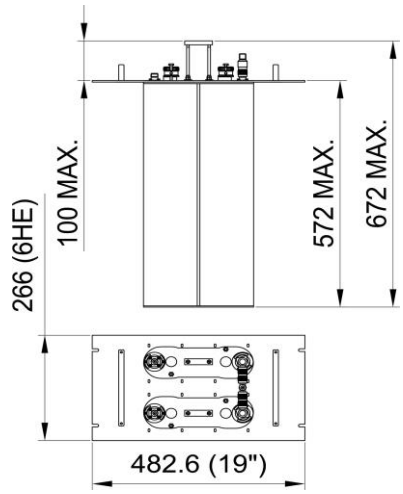

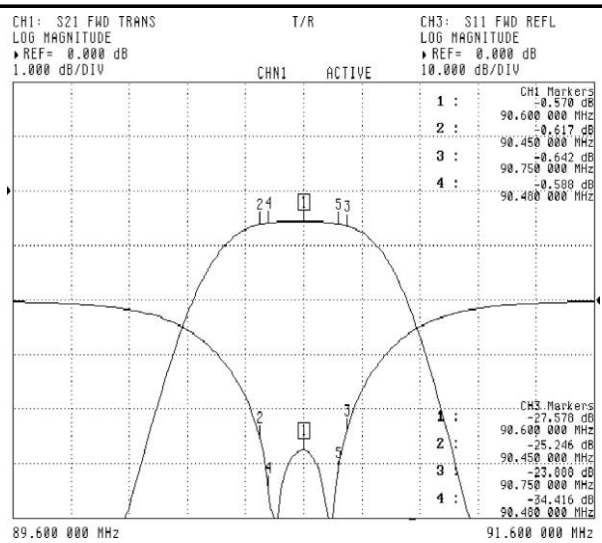

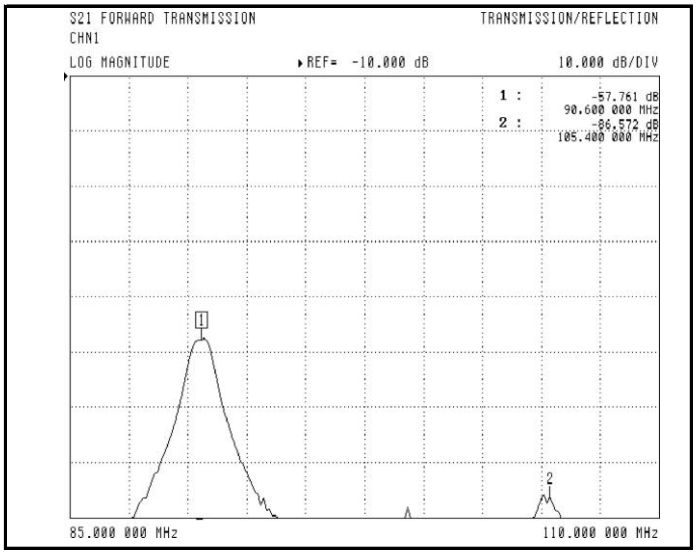

ELECTRICAL CHARACTERISTICS	
Frequency Range (MHz)	87.5 ÷ 108
Insertion Loss by channels (dB)	< 0.85
Return loss by channels (dB)	> 26
Input/output impedance (Ohm)	50
Min. distance between channels (MHz)	2
Insulation between channels (dB)	> 30
Maximum channel input power (W)	300
Maximum output power (W)	600

MECHANICAL CHARACTERISTICS	
Input connection	N
Output connection	N
Temperature range (C°)	-10 ÷ 50
Weight (kg)	16

(*) Different connectors on request.