In term of law DELTA MECCANICA s.r.l. claims the property of this drawing. Any reproduction in any form without our authorization is forbidden
This document cannot be considered to be a contractual specification. The informations given herein may be modified without notice due to product improvement or further development.

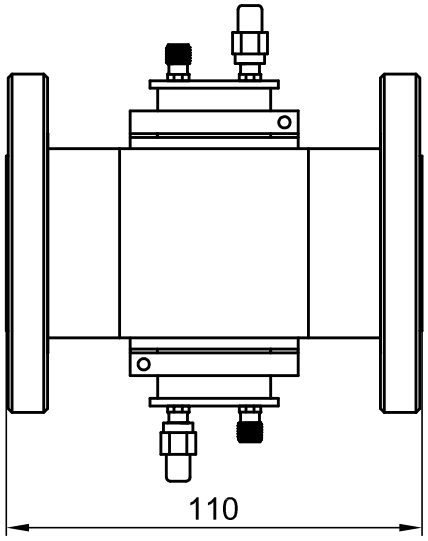

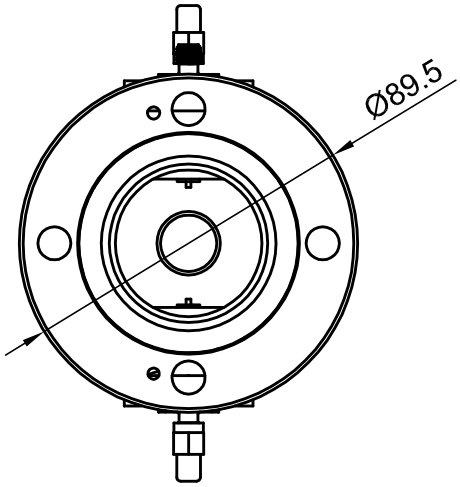

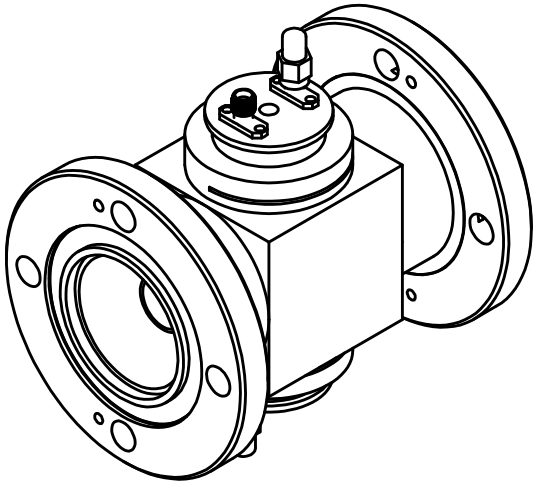

Electrical Characteristics		
Frequency Range	FM Band	87.5 ÷ 108 MHz
	VHF BIII	170 ÷ 230 MHz
	UHF BIV-V	470 ÷ 862 MHz
Insertion Loss by Channels		< 0.05 dB
Return Loss by ch. (VSWR)		> 30 dB (≤ 1.06)
Input/Output Impedance		50 Ω
Coupling Factor		−35 ÷ −58dB (*)
Amplitude variation	FM Band	± 1 dB
	VHF BIII	± 1.5 dB
	UHF BIV-V	± 3 dB
Directivity		> 30 dB

(*) To be define at order confirmation

dwg.	quality control	date	scale			sheet
Adami		27/05/11	1:2		A4 210X297	1/1

δ DELTA Meccanica s.r.l.

TITLE: 1 5/8" DIRECTIONAL COUPLER WITH TWO SMA PROBE

CODE: 1110-02-SMA

REV.